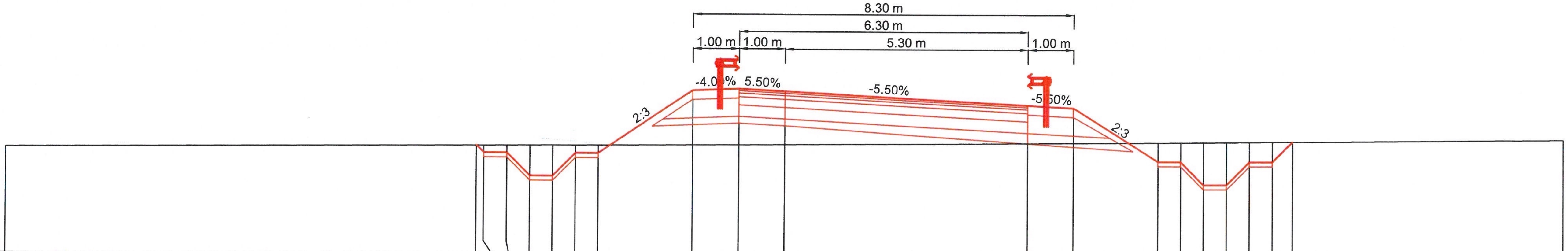

R.L. = 90.00

COTE PROIECT		92.38	92.22	92.22	91.72	91.72	92.22	92.22	93.59	93.63	93.58	93.29	93.22	92.07	92.07	91.57	91.57	92.07	92.07	92.51	
COTE TEREN	92.30	92.38	92.38	92.38	92.38	92.39	92.39	92.39	92.41	92.42	92.42	92.46	92.47	92.49	92.49	92.49	92.50	92.50	92.51	92.51	92.55
DISTANTE	-17.00	-6.72	-6.56	-6.06	-5.56	-5.06	-4.56	-4.06	-2.00	-1.00	0.00	5.30	6.30	8.15	8.65	9.15	9.65	10.15	10.65	11.09	17.00

KM = 180.00

SUPERVIZOR
D.R.D.P. TIMIŞOARA
BUN DE EXECUȚIE
DATA: 01.04.2022

SOCIETATEA COMERCIALĂ TOTAL ROAD S.R.L. BUCUREȘTI - ROMÂNIA

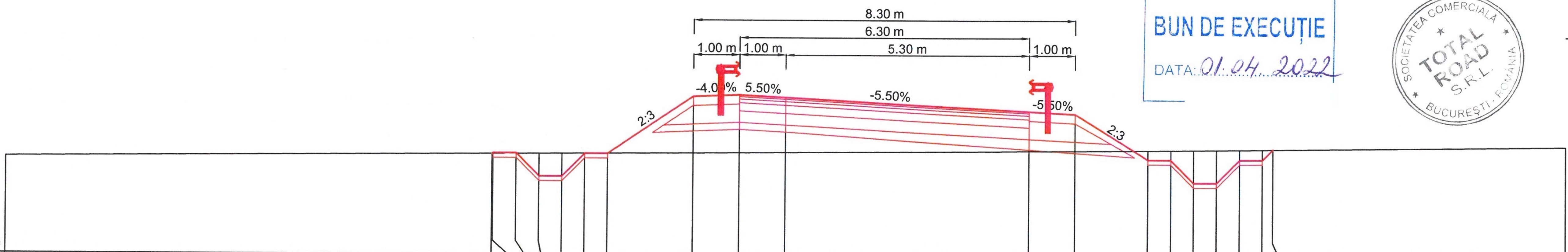

R.L. = 90.00

COTE PROIECT		92.18	92.20	92.20	91.70	91.70	92.20	92.20	93.44	93.48	93.43	93.14	93.08	92.09	92.09	91.59	91.59	92.09	92.09	92.32	
COTE TEREN	92.10	92.18	92.18	92.19	92.19	92.20	92.20	92.20	92.22	92.23	92.24	92.28	92.28	92.30	92.30	92.31	92.31	92.31	92.32	92.32	92.37
DISTANTE	-17.00	-6.39	-6.37	-5.87	-5.37	-4.87	-4.37	-3.87	-2.00	-1.00	0.00	5.30	6.30	7.90	8.40	8.90	9.40	9.90	10.40	10.62	17.00

KM = 160.00

BENEFICIAR:

COMPANIA NATIONALA DE ADMINISTRAREA INFRASTRUCTURII RUTIERE S.A. (C.N.A.I.R. S.A.)

ANTREPRENOR:

TODINI CONSTRUZIONI GENERALI S.p.A.

TITLU PROIECT

PROIECTARE SI EXECUȚIE „DRUM DE LEGĂTURĂ AUTOSTRADA A1 ARAD - TIMIȘOARA - DN 69"

FAZA PROIECT: PROIECT TEHNIC DE EXECUTIE (P.T.E.)

CONTRACT NR. 92/7703/01.02.2021

PROIECT NR. 08/2021

SPECIFICATIE	NUME	SEMNATURA
DESENAT	Teh. Sorin VASILACHE	
PROIECTAT	Ing. Mihai COROIAN	
SEF PROIECT	Ing. Catalin GRUIANU	
VERIFICAT	Ing. Adrian NISTOR	

DATA Martie 2022

MĂRIMEA A3

SCARĂ 1:100

TITLU PLANSA:

LUCRARI DE INFRASTRUCTURA RUTIERA

PROFILURI TRANSVERSALE CURENTE

NOD DN69 - BRETEA 2

NUMAR PLANSA: PTC - 343

PICHET -

Revizie

NR.	DATA	DESCRIERE
0	08.2021	Emitere P.T.E.
1	09.2021	Conf. nr.290/DLA1-224
2	02.2022	Conf. ASR 92/93833

PAGE 1 / 1